CAD

CLEAN & ASEPTIC DESIGN

DOUBLE POSITION SENSOR

MANUAL AND SAFETY INSTRUCTIONS
CODE: XACT-SEND-0XX0-X0000

RATTIINOX

ASEPTIC EQUIPMENT - DESIGN & SUPPLIER

INDEX

1. Scope .2

2. Description .2

2.1 Standards and ATEX marking

3. Operation .4

3.1 Setting procedure

4. Installation and maintenance .6

4.1 Intended use

4.2 Mounting and Installation

4.3 Maintenance and repair

4.4 Specific conditions of safe use (“X“)

5. Technical data .7

5.1 Safety ratings

5.2 Technical data

5.3 Electrical connections

5.4 Mechanical connections and spare parts

6. Tools .12

6.1 CAD Programmer

6.2 Cable for double position sensor

1. Scope

This document is intended as an extract from the sensor installation and use manual. Additional information is offered in the sensor installation and use manual provided it does not conflict with the minimum information contained in this document.

2. Description

XACT-SEND-0XX0-X0000 is an intrinsically safe dual position sensor, which provides an indication of the status of the pneumatically actuated valve giving the possibility to record the opening and closing positions. The sensor signals the opening and closing positions through the indicating LEDs and the two transistor sensor outputs. The activation position of the 2 sensor outputs can be set by following the calibration procedure.

2.1 Standards and ATEX marking

European directive: 2014/34/UE (ATEX)
ATEX certificate: IMQ 22 ATEX 021 X
Reference standards: EN IEC 60079-0:2018; EN 60079-11:2012

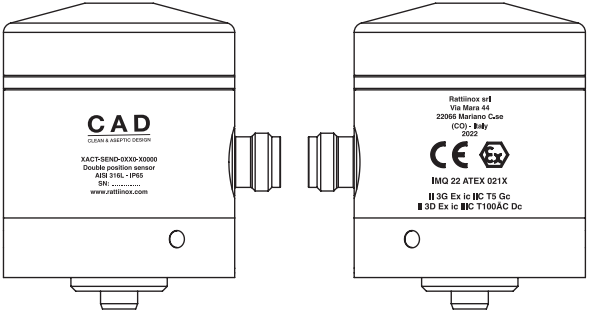

II 3G Ex ic IIC T6 Gc or II 3G Ex ic IIC T5 Gc II 3D Ex ic IIIC T85°C Dc or II 3D Ex ic IIIC T100°C Dc	
Marking required by Directive 2014/34 / EU (ATEX)	
II	Group II: product intended for surface environments, not mines
3	Category 3: product suitable for zone 2 (G - gas) / zone 22 (D - dust)
G	Manufactured for potentially explosive gas atmospheres
D	Manufactured for potentially explosive dust atmospheres
Marking required by the harmonized standards of the Directive (EN IEC 60079-0: 2018; EN 60079-11: 2012)	
EX IC	Intrinsically safe protection mode (Ex i: EN 60079-11: 2012), level “c” (zone 2 / zone 22)
IIC	Gas group
T6	Temperature class for gas: surface temperature ≤85°C
T5	Temperature class for gas: surface temperature ≤100°C
GC	EPL (Equipment protection level) for gas: “c”, corresponding to zone 2
IIIC	Dust group (fuel)
T85°C	Surface temperature for powders ≤85°C
T100°C	Surface temperature for powders ≤100°C
DC	EPL (Equipment protection level) for dust: “c”, corresponding to zone 22

Additional marking data:

- Declared ambient temperature: from -10°C to +65°C, or from -10°C to +80°C.
  Temperature class: T6/T85°C with ambient temperatures up to +65°C.
  Temperature class: T5/T100°C with ambient temperatures up to +80°C.
  The ambient temperature range is specified in Certificate no. IMQ 22 ATEX 021

- Degree of protection (EN 60529): IP65/IP67
- 2022 (example): manufacturing year
- Sensor model: XACT-SEND-0XX0-X0000
- SN: serial number

3. Operation

With the valve closed, the sensor lights up RED and the POS1 output is activated. With the valve open, the sensor lights up GREEN and the POS2 output is activated. If the valve were to lock in an intermediate position for a period exceeding 3s, the sensor would signal the anomaly by flashing BLUE (the POS1 and POS2 outputs are open).

LED	PROGRAMMING	NORMAL	ANOMALY
RED LED	Blinks 2 times when valve closed position is registered	Steady on in case of closed valve	It flashes alternately with the GREEN LED if the valve open position is registered before the valve closed position
BLUE LED	Steady on for 10 sec	Turned off	Flashes when the valve locks in an intermediate position
GREEN LED	Flashes 2 times when valve open position is registered	Steady on in case of open valve	It flashes alternately with the RED LED if the valve open position is recorded before the valve closed position

3.1 Open and closed valve limits setting procedure

Using the appropriate programming accessory, it is possible to set the two detection limits of valve open and valve closed by following the following procedure (the setting of the limits must be carried out at room temperature):

1. Mount the sensor on the valve.
2. Move the valve to the closed position.
3. Press the SET button: the sensor will light up BLUE. By pressing the SET button, a time interval of 10 s is available to make the two recordings of open and closed position.
4. Leaving the valve in the closed position, press the SET button again: the sensor flashes RED twice, recording the closed valve position (the RED LED on the programmer also flashes).
5. Move the valve to the open position.
6. Press the SET button again: the sensor flashes GREEN twice, registering the valve open position (the GREEN LED on the programmer also flashes).

After 10 s have elapsed from the first pressing of the SET button, the sensor will be programmed and the Blue LED will switch off. If by mistake the open valve is recorded as the first position and the closed valve second, the sensor would signal the anomaly by alternately flashing RED and GREEN. It is possible to make the setting even without using the programmer simply by closing the SET contact towards Vin (see Connections paragraph).

4. Installation and maintenance

4.1 Intended use

The device is approved for proper and intended use only. Failure to comply with these instructions will invalidate any guarantee and release the manufacturer from any liability. Use the device only in the specified environmental and operating conditions. The device is an electrical apparatus for hazardous areas. The device can be used in hazardous areas containing gases, vapors and mists. The device can be used in hazardous areas containing combustible dusts.

4.2 Assembly and installation

Observe the installation instructions in accordance with IEC / EN.
Do not mount a damaged device. Mount the device in such a way as not to compromise the degree of protection IP65 / 67 (IEC / EN 60529).

4.3 Maintenance and repair

To be carried out in compliance with the IEC / EN 60079-17 standard.
Do not use a damaged or contaminated device.
Do not repair, modify or manipulate the device.
In case of defects, always replace the device with another original device.
Do not remove the marking.
Prevent the inside of the device from becoming contaminated when the connector is disconnected.

4.4 Specific conditions of safe use (“X“)

Nominal ambient temperature from -10°C to + 65°C, or from -10°C to +80°C. The sensor is not intended to be directly connected to an external heating or cooling source that brings the ambient temperature outside the range -10°C to +65°C or -10°C to + 80°C. Should this condition occur, appropriate precautions and assessments during the installation phase must be taken by the installer. An adequate equipotential connection of the metal masses must be guaranteed during the installation.

Safety ratings: Ui= 30V; Ii= 120 mA; Pi= 1,1 W; Ci=200 nF; Li=20 µH

Barrier power supply (Ex associated apparatus, with marking suitable and consistent with the sensor marking).

5. Technical data

5.1 Safety ratings

Ui= 30V; Ii= 120 mA; Pi= 1,1 W; Ci=200 nF; Li=20 μH

5.2 Technical data

TECHNICAL DATA	
Supply voltage	10 ÷ 30VDC
Maximum absorbed current without load (@ Vin = 30V)	40 mA
Valve opening and closing transistor outputs (POS1 and POS2)	Type: Open collector PNP Imax: 80mA Vmax: 40V
Operating temperature limits	-10°C + 80°C
Storage temperature limits	-10°C + 80°C
Degree of protection	IP65/IP67
EMC compliance	EN 61326-1:2006, EN61000-6-2:2006, EN61000-6-3:2007, EN 61326-2-3:2006

TABLE OF ABSORBED POWER WITHOUT LOAD		
VDC [V]	**IDC_[A]**	**P [W]**
10	0,04	0,4
15	0,04	0,6
20	0,04	0,8
24	0,04	0,96
30	0,04	1,2

5.3 Electrical connections

CONNECTIONS					
Number	**Name**	**Type**	**Function**	**V DC [V]**	**Max I [mA]**
1	L+	Power Supply	Positive Power	10 ÷ 30	50
2	L-	Power Supply	Negative Power	-	-
3	SET	Input	Limits setting	-	28
4	POS1	Output	Valve output closed	10 ÷ 30 (Vin)	80
5	POS2	Output	Valve output open	10 ÷ 30 (Vin)	80

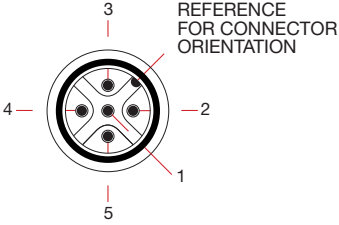

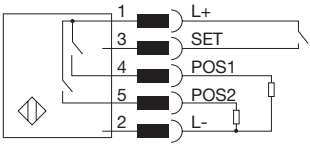

To program the sensor trip limits without the programmer, connect a N.O. button between the SET and Vin contacts.

DIAGRAM FOR ATEX APPLICATIONS

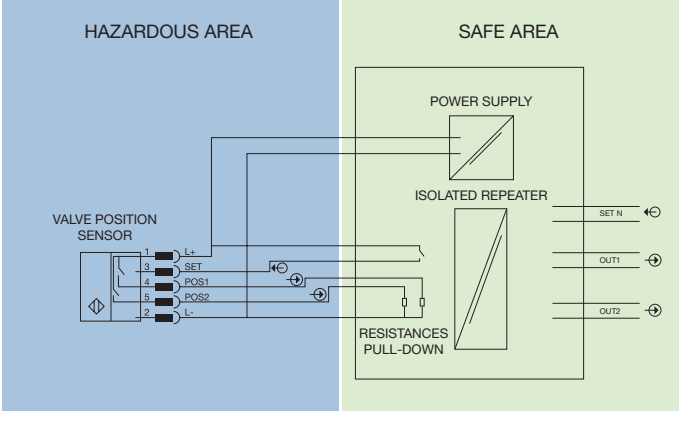

5.4 Mechanical connections and spare parts

Install the correct needle and the correct spring on sensor shaft according to the following drawing.

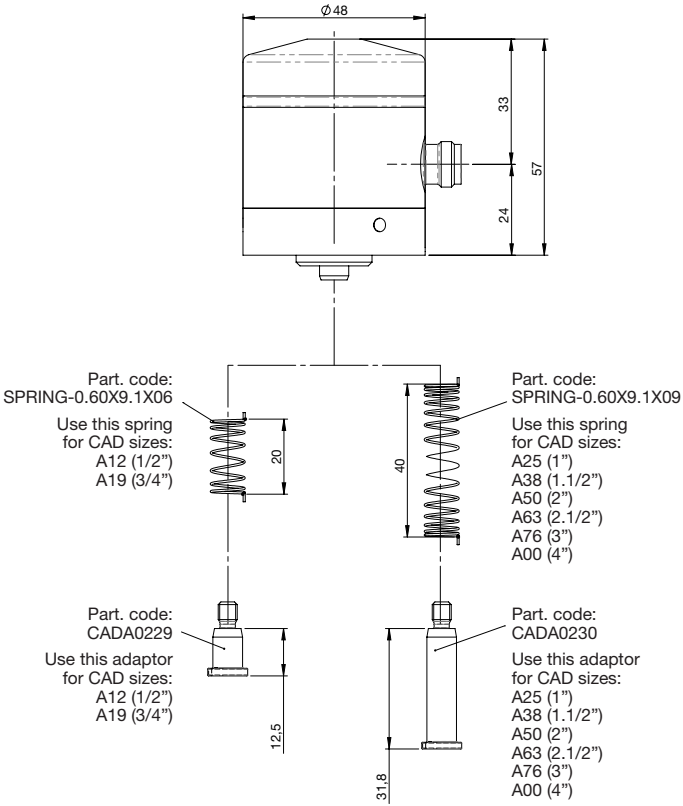

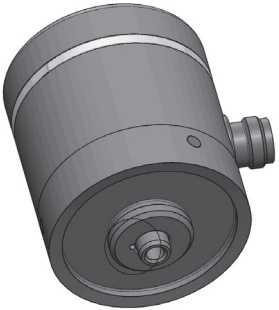

C

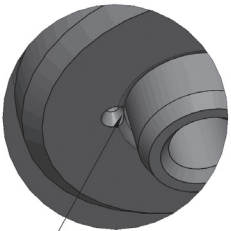

DETAIL C

UPPER
ANTIROTATION SOCKET
FOR SPRING

ATTENTION: PLEASE INSERT ANTIROTATION PORTION OF BOTH SIDE OF THE SPRING INSIDE RELATED SOCKET

D

LOWER
ANTIROTATION SOCKET
FOR SPRING

DETAIL D

6. Tools

6.1 CAD Programmer

CAD Programmer is a useful tool for fast and easy programming of CAD Double Position Sensor also while the valve is working. After connecting to the sensor, programming can be achieved just pushing 3 times the single pulsant: once to start programming, then for save closure point detection when actuator is on closed position and then a third time for saving the open position when the actuator is in correspondence of the open position. This programming require just few seconds (see section 3.1).

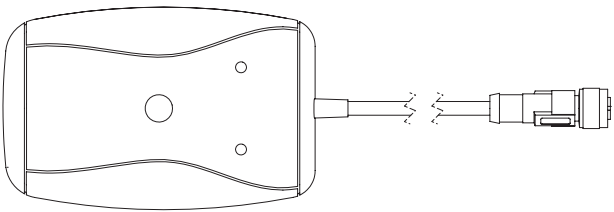

CODE	SUITABLE FOR CAD SENSOR	Lenght mm (inch)
YACT-SENP-0XC0-X0000	XACT-SEND-0XX0-X0000	2,00 (79)

6.2 Cable for double position sensor

Cable for CAD Double Position Sensor, genuine cable to provide power supply to CAD Sensor, arrange remote programming via PLC and transmit open and close position of the actuator where sensor is installed.

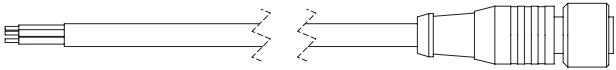

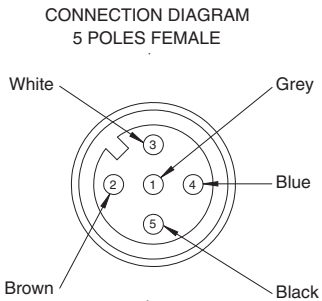

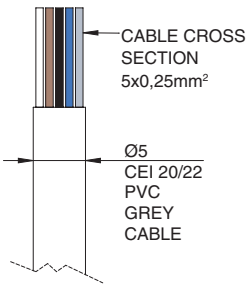

CODE	SUITABLE FOR CAD SENSOR	Lenght mm (inch)
YACT-SEND-0XC0-X0000	XACT-SEND-0XX0-X0000	4,00 (157)
YACT-SEND-0XC0-X0030	XACT-SEND-0XX0-X0000	30,00 (1181)

RATTIINOX S.r.l.
Via Mara, 44 I-22066 Mariano Comense (CO)
T. +39.031.3551263
info@rattiinox.com www.rattiinox.com